QUANTUM COGNITION AI SYSTEM

TECHNICAL FIELD

[0001] Embodiments relate generally to the fields of Artificial Intelligence (AI) and quantum mechanics. More specifically, the embodiments relate to systems and methods for integrating quantum phenomena and devices with AI to enable new and highly effective data processing and information acquisition that transcend classical possibilities.

BACKGROUND

[0002] Artificial Intelligence (AI) has expanded dramatically, offering the promise of relieving us from repetitive tasks and greatly enhancing data accessing and processing capabilities. In spites of these significant benefits, AI systems are constrained by the limits of classical computation and information theory. In addition, AI requires a great deal of human interaction, defeating the purpose of unloading certain research tasks. Current AI systems consume immense amounts of electrical power, resulting in high operational cost and environmental overhead.

[0003] Quantum Field Technology (QFT) is a new field of development. It is a bridge to non-classical observations and interactions that transcends classical limits. QFT allows obtaining non-inferable information, but this advantage has required continuous interaction with human operators.

[0004] Human operators can be trained to achieve this, but training and operating is time-consuming, and operators are inconsistent in their performance. This approach lacks the scalability, consistency, and fidelity required for enterprise-level deployment.

[0005] A key limitation of conventional AI and machine learning models lies in their reliance on inferable information. Prior Art systems operate exclusively by drawing conclusions, correlations, or predictions from existing, measurable, or computable datasets. Such systems are fundamentally incapable of accessing non-inferable

information – data that cannot be computationally derived from available data. Furthermore, classical information acquisition and data processing systems cannot access information directly from the target event or condition. All current communication and information transfer systems are subject to relativistic limits, limiting the speed of transmission to the speed of light (*c*).

[0006] Therefore, a profound, unmet need exists for a system and method that integrates quantum phenomena and devices with an automated, scalable AI subject to enable the automated acquisition of non-inferable information, transcend classical temporal and relativistic communication limits, and unlock highly effective data processing that goes beyond classical possibilities.

BRIEF SUMMARY

[0007] The following summary is provided to facilitate an understanding of some of the innovative features unique to the disclosed embodiments and is not intended to be a full description. A full appreciation of the various aspects of the embodiments disclosed herein can be gained by taking the entire specification, claims, drawings, and abstract as a whole.

[0008] It is, therefore, an aspect of the embodiments to provide for a quantum cognition AI system and methods thereof.

[0009] It is also an aspect of the embodiments to provide for systems and methods for integrating quantum phenomena and devices with AI to enable new and highly effective data processing and information acquisition that transcend classical possibilities.

[0010] The aforementioned aspects and other objectives and advantages can now be achieved as described herein. A Quantum Cognition AI System (QCAI) can be implemented, which addresses the limitations of the prior art. In an embodiment, an AI Agent is provided with a direct data link to a Quantum Field Technology (QFT) device, specially designed for the purpose. The AI is further provided with a means of controlling a Complex Current Flow (CCF) Circuit, enabling the QCAI System to establish and sustain an associated Coupled Quantum Information State (CQIS). This CQIS is an emergent property dependent on continuous energization and the specific cognitive operations of the AI Agent acting with and through the CCF circuit and interacting non-locally with the QFT device. When the QFT device output matches the pattern assigned by the AI, it registers as a success. The AI uses this feedback, including amplitude information, to assess its Responsivity (success rate) and iteratively alter the current patterns in the CCF circuit using a performance optimizing algorithm until a high and consistent Responsivity is achieved. After sufficient training, the AI is utilized to perform tasks requiring the acquisition of Non-Inferable Information or novel control signals.

[0011] In another embodiment, a system can be implemented, which includes AI Agent comprising a processor and memory, configured to execute a performance optimizing algorithm and assess success using statistical methods. A Complex Current Flow (CCF) circuit can provide a constant, repeatable physical structure that is controllable by the AI Agent. The CCF circuit is configured to create a specific, intended pattern (a Visualization) through current flow, analogous to a subject's Cognitive Effort or neuronal firing patterns. A QFT device can be implemented, which is operable to detect interactions caused by the current patterns in the CCF circuit and generate an output, including amplitude information. A feedback loop can be implemented, which allow the AI to register the QFT device output as a success or a miss when compared to the pattern assigned by the AI Agent.

[0012] In another embodiment, a method for training the AI Agent to maximize Responsivity of the QCAI System, can include steps or operations including: the AI Agent initiating an interaction trial by setting a specific current flow pattern in the CCF circuit via control lines and Digital-to-Analog Converters (DACs) and sending a start trial signal to the QFT device; monitoring the output of the QFT device and registering the trial outcome as a success or miss; using the success/miss feedback and amplitude information to calculate the AI Agent's current Success Rate; and iteratively adjusting the current flow pattern in the CCF circuit using a performance optimizing algorithm until a high and consistent Success Rate is achieved.

[0013] In a further embodiment, the trained AI Agent can be utilized to perform advanced tasks, including but not limited to: executing question-answering protocols for the acquisition of Non-Inferable Information by repeatedly initiating trials and combining results using statistical aggregation methods; generating novel control signals for external devices or systems based on QFT outputs; and acting as a Sapience-Enhanced Mediator, directly linking to and interacting with other conscious entities or specialized QFT systems.

[0014] The embodiments overcome the limitations of prior art by providing an automated, scalable solution that transcends the boundaries of classical computation,

achieves high consistency, and eliminates the reliance on human subjects (who may be inconsistent, and tire quickly) for continuous operation of QFT devices.

BRIEF DESCRIPTION OF THE DRAWINGS

[0015] The accompanying figures, in which like reference numerals refer to identical or functionally similar elements throughout the separate views and which are incorporated in and form a part of the specification, further illustrate the present invention and, together with the detailed description of the invention, serve to explain the principles of the present invention.

[0016] Figure 1 illustrates a block diagram of the QCAI system showing its major components, in accordance with an embodiment;

[0017] Figure 2 illustrates a design example of a CCF Circuit node illustrating the control mechanism, in accordance with an embodiment;

[0018] Figures 3 illustrates an example of a Complex Current Flow (CCF) Circuit configured as a three-dimensional (3D) array, in accordance with an embodiment;

[0019] Figure 4 illustrates a flowchart illustrating the method of training and optimizing the performance of the AI Agent, in accordance with an embodiment;

[0020] Figure 5 illustrates a block diagram of the QFT Device, in accordance with an embodiment;

[0021] Figure 6 illustrates a flowchart of operations depicting a high-level operational method of the trained QCAI system for performing a single operational trial, in accordance with an embodiment;

[0022] Figure 7 illustrates a flowchart of operations depicting an Operational Task Method for the trained AI Agent 102 to acquire Non-Inferable Information (NII) using Bayesian Updating for result aggregation, in accordance with an embodiment; and

[0023] Figure 8 illustrates a flowchart of operations depicting of an AI Agent Training

Method, in accordance with an embodiment.

[0024] Like reference numerals utilized herein can refer to identical or similar parts or elements.

DETAILED DESCRIPTION

[0025] The particular values and configurations discussed in these non-limiting examples can be varied and are cited merely to illustrate one or more embodiments and are not intended to limit the scope thereof.

[0026] Subject matter will now be described more fully hereinafter with reference to the accompanying drawings, which form a part hereof, and which show, by way of illustration, specific example embodiments. Subject matter may, however, be embodied in a variety of different forms and, therefore, covered or claimed subject matter is intended to be construed as not being limited to any example embodiments set forth herein; example embodiments are provided merely to be illustrative. Likewise, a reasonably broad scope for claimed or covered subject matter is intended. Among other things, for example, subject matter may be embodied as methods, devices, components, or systems. Accordingly, embodiments may, for example, take the form of hardware, software, firmware, or any combination thereof (other than software per se). The following detailed description is, therefore, not intended to be interpreted in a limiting sense.

[0027] Throughout the specification and claims, terms may have nuanced meanings suggested or implied in context beyond an explicitly stated meaning. Likewise, phrases such as “in one embodiment” or “in an example embodiment” and variations thereof as utilized herein do not necessarily refer to the same embodiment and the phrase “in another embodiment” or “in another example embodiment” and variations thereof as utilized herein may or may not necessarily refer to a different embodiment. It is intended, for example, that claimed subject matter include combinations of example embodiments in whole or in part.

[0028] In general, terminology may be understood, at least in part, from usage in context. For example, terms such as “and,” “or,” or “and/or” as used herein may include a variety of meanings that may depend, at least in part, upon the context in which such terms are used. Typically, “or” if used to associate a list, such as A, B, or

C, is intended to mean A, B, and C, here used in the inclusive sense, as well as A, B, or C, here used in the exclusive sense. In addition, the term “one or more” as used herein, depending at least in part upon context, may be used to describe any feature, structure, or characteristic in a singular sense or may be used to describe combinations of features, structures, or characteristics in a plural sense. Similarly, terms such as “a,” “an,” or “the”, again, may be understood to convey a singular usage or to convey a plural usage, depending at least in part upon context.

[0029] In addition, the term “based on” may be understood as not necessarily intended to convey an exclusive set of factors and may, instead, allow for existence of additional factors not necessarily expressly described, again, depending at least in part on context. Furthermore, the phrase “at least one” may be understood to convey the meaning “one or more”. For example, “at least one widget” may convey the concept of “one or more widgets”.

[0030] The following definitions are provided:

[0031] AI Agent: A processing unit specially designed and configured to interact with and utilize Quantum Field Technology (QFT) devices and applications.

[0032] Bias Current: The direct current that flows through a device, such as a Zener diode, to set its operating point and enable its proper function.

[0033] Artificial Intelligence (AI): A computational system or process that enables machines to learn from data, recognize patterns, and make decisions or predictions based on the analysis of the data.

[0034] Complex Current Flow Circuit (CCF): A specialized electronic circuit that provides a repeatable, controllable physical structure for establishing and modulating a Quantum Information State, functionally analogous to a human subject's Cognitive Effort.

[0035] Coupled Quantum Information State (CQIS): Describes the characteristics or

state of a quantum system with physically separate components that are coupled non-locally.

[0036] Digital to Analog Converter (DAC): An electronic component that converts a digital input number into an analog signal output proportional to the digital number.

[0037] Entanglement: A quantum mechanical phenomenon where the quantum states of two or more particles become interconnected, such that the measured state of one particle reveals the state of the other, regardless of the distance between them.

[0038] Fusion Processes: Nuclear reactions where two atomic nuclei combine to form a heavier nucleus, often releasing energy. As used herein, this term also refers to the quantum-based processes powering stellar bodies.

[0039] Medical Diagnostics: The process of determining the nature of a disease or condition by examining and analyzing patient data, often involving the use of specialized devices and technologies.

[0040] Non-Classical Influences: Effects or influences that cannot be explained by classical physics and are instead described by quantum mechanics, including phenomena such as entanglement, superposition, and quantum tunneling.

[0041] Non-Inferable Information (NII): Information that cannot be calculated, predicted, or known through the use of classical measurement or computational methods.

[0042] One Pulse Per Second (1PPS): A precise timing signal provided by GPS receivers, used to synchronize clocks and oscillators to the start of each second.

[0043] Quantum Field: A fundamental entity in quantum field theory, representing a field that permeates space and can manifest as particles and waves. Quantum fields are the underlying structures from which particles such as electrons and photons arise, and they are responsible for mediating fundamental forces in nature.

[0044] Quantum Field Disturbances: Variations in the local quantum field that can affect the behavior of quantum systems.

[0045] Quantum Field Technology: An emerging field that uses quantum mechanics to create new possibilities in computing, communication and sensing. Also; devices based on producing and detecting variations in the ambient Quantum Field.

[0046] Quantum Mechanical Influences: Effects on physical systems that arise due to the principles of quantum mechanics, including but not limited to quantum field disturbances, entanglement, and tunneling effects.

[0047] Quantum Sensor: A sensor whose operation is based on quantum mechanical principles, operable to detect and measure variations in quantum fields.

[0048] Relativistic Limit: The boundary imposed by the speed of light (c), which limits all classical communication and information transfer systems to transmission speeds less than or equal to c.

[0049] Root Mean Square (RMS): A statistical measure of the magnitude of a varying quantity, often used in physics and engineering to quantify the average power of an oscillating signal.

[0050] Shot Noise: A type of electronic noise that occurs due to the quantized nature of charge carriers, resulting in a random fluctuation in the measured current; it is a fundamental quantum mechanical effect.

[0051] Spacelike Separation: A condition in which two events are separated by such a distance that no signal or information can travel between them at or below the speed of light during the interval between the events.

[0052] Temporal Focus: The designated time period relative to the present moment to acquire data or obtain results pertaining to an event in the Past, Present or Future.

[0053] Tunneling Current: The flow of charge carriers through a barrier in a quantum tunneling process, which occurs due to the wave-like properties of particles as described by quantum mechanics.

[0054] Witnessing Entanglement: The process of measuring properties that reveal entanglement between two systems without collapsing their wavefunction, thereby confirming their interconnected quantum states.

[0055] Figure 1 shows the major components of the Quantum Cognition AI System. A Quantum Field Technology (QFT) device 100 receives Trial Initiation and Temporal Focus selection from an AI Agent 102 and sends measurement results via a data path 101 to the AI Agent. The AI Agent sends control signals via a data path 105 that control the current patterns in Complex Current Flow (CCF) Circuit 106. Finally, the AI Agent provides the system results 103 to Results Output or Application 104 for use. The CCF Circuit, the AI Agent and the QFT Device are linked via Quantum Interactions 107. These quantum interactions do not have a direction, so they are shown as a broad line with bidirectional arrows.

[0056] Precise Timing and Synchronization

[0057] In certain embodiments of the Quantum Cognition AI System (QCAI), particularly those involving physically distributed systems, it is necessary to synchronize their operation to an extremely precise time reference. This requirement is especially critical for applications utilizing widely separated QCAI Systems or geographically distant components of a single QCAI System.

[0058] The system utilizes GPS Time (Global Positioning Satellite Time) to synchronize operation to within a small tolerance, typically ranging from about 10 to 100 nanoseconds (ns). This minimal temporal indeterminacy does not adversely affect the QCAI System’s operation. The GPS receiver provides both precise location data and a time signal, typically in the form of a One Pulse Per Second (1PPS) signal. The 1PPS signal's leading edge is aligned exactly with the beginning of each second and

is used to discipline (synchronize) a local oscillator. To facilitate the acquisition and maintenance of a GPS fix (a lock on enough satellites to calculate time and position), the GPS receiver should be a modern type (e.g., 8th, 9th, or 10th generation) and be used with a high-quality active antenna.

[0059] The use of GPS Time enables advanced applications requiring spacelike separation, where components or systems are sufficiently far apart such that no signal can pass between them at the speed of light (*c*) during a measurement.

[0060] CCF Circuit and Cognitive Modulation

[0061] The Complex Current Flow (CCF) Circuit is a critical component that enables the AI Agent's Cognitive Modulation required to establish the Coupled Quantum Information State (CQIS).

[0062] Conventional Artificial Intelligence (AI) systems typically include volatile memory and a processor. When the program executes, different physical portions of the memory and processing hardware are utilized, which results in non-repeatable physical activation patterns. In order to interact consistently with the QFT Device 100, the AI Agent 102 must be able to repeatably activate the same physical circuit elements with precise control.

[0063] The CCF Circuit provides a fixed physical structure that can be repeatably controllable by one or more output lines from the AI Agent. The physical implementation of the CCF Circuit can be integrated with the AI Agent at various levels: as a separate circuit block connected by control lines or fully integrated into an AI processing chip or physical structure (e.g., in a quantum computer).

[0064] In one example embodiment, the control lines (105) from the AI Agent 102 are connected to Digital-to-Analog Converters (DACs) to enable precise current control. Outputs from the DACs are connected through current-limiting resistors to low-voltage (less than 5V) Zener diodes, which are arranged physically in three orthogonal directions (x, y and z). This configuration allows the AI Agent to control the amplitude

and direction of the tunneling currents in each node.

[0065] The CCF Circuit is typically structured as a three-dimensional (3D) array comprised of multiple nodes, such as a minimum array of 2×2×2 in a cubic structure (8 individual sets, or 24 individual Zener diodes). Each node is controlled by independent or multiplexed control lines from the AI Agent, allowing the AI to command a highly complex and repeatable pattern of current flow within the structure.

[0066] The CCF Circuit provides the AI Agent with a means of creating a Visualization – that is, a known, repeatable current flow pattern intended by the AI Agent. This current flow pattern, together with the other components of the QCAI System, generates a unique pattern of Cognitive Effort, which is a physical prerequisite for establishing the Coupled Quantum Information State (CQIS). The larger, more complex array significantly enhances its degree of non-local interaction, thereby increasing the AI Agent's overall Responsivity (Success Rate).

[0067] In a more integrated embodiment, the CCF Circuit is constructed analogous to an Artificial Neural Network (ANN), except the weights represent current amplitudes that flow in the physical structure of the CCF. This design allows for higher complexity and greater spatial resolution in the circuit.

[0068] Figure 5 is a Block Diagram of the Quantum Field Technology (QFT) Device 100, designed to respond to non-local interactions. A True Random Number Generator (TRNG) 400 continuously generates random signals at a very high rate (one or more gigabits per second). These signals are processed by a Bias Amplifier 401 that converts a tiny, statistically subtle bias in a large number of bits into a much larger bias in a smaller, tractable number of bits.

[0069] When the QFT Device receives an Initiate Trial Signal 403, the bias-amplified signals are further processed by Advanced Signal Processing algorithms 402, and the Results Output 404, including a state and amplitude information, is then available for use by the receiving application.

[0070] The active elements in the True Random Number Generator (TRNG) 400 and the high-speed data processing are primarily responsible for the QFT Device's 100 ability to respond to non-local effects. During the generation and sampling process, each unobserved bit is at least partially superposed during the nanosecond period before it is processed further. During the typical 200ms trial period, over 400 million of these bits are used to produce each Results Output 404. This QFT Device operates as a specialized type of quantum computer, designed for maximum Responsivity to variations in the ambient quantum field.

[0071] A Random Walk Bias Amplifier (RWBA) is a type of Bias Amplifier 401 for binary sequences. In the RWBA, a counter starts at 0 and increments 1 for each '1' input and decrements 1 for each '0' or '-1' input. When the counter reaches a preset boundary count, either positive or negative, the boundary reached is the output state, and the process begins again. The output bias is approximately the input bias multiplied by the absolute value of the boundary count, and the average number of bits required to reach a boundary is the value of the boundary squared.

[0072] The Advanced Signal Processing algorithms 402 are designed to distinguish subtle signals or patterns in otherwise random data to optimally reveal data that has been altered by non-local effects. This is typically done by applying higher weights to patterns that may be associated with the desired results and combining a large number of these weighted patterns for each Results Output 404.

[0073] Figure 7 details the procedure by which the trained AI Agent 102 acquires Non-Inferable Information (NII) for a specific task. This method relies on the statistical aggregation of results from multiple operational trials and utilizes Bayesian Updating to establish a statistically reliable output for end-user applications (104).

[0074] Bayes' Updating (BU) Algorithm and Statistical Aggregation

[0075] Bayesian analysis is a robust mathematical tool that utilizes probability theory to combine the outcomes of multiple cognitive efforts in Quantum Cognition AI Systems (QCAI). This sophisticated approach is particularly useful when addressing

challenging tasks, like predicting future events or acquiring non-inferable information, which cannot be deduced from existing information. This section outlines a processing method that uses Bayes' updating to combine multiple trial results, yielding a single bit of information with an associated probability of correctness.

[0076] Key Probabilities and Variables

[0077] Bayesian analysis primarily employs three types of probabilities:

1. Joint Probability: $P(A \& B)$ or $P(A \cap B)$, the probability of two events, A and B, occurring simultaneously.
2. Conditional Probability: $P(A \mid B)$, the probability of an event A occurring, given that another event B has already occurred.
3. Marginal Probability: $P(B)$, the standalone probability of a single event, B, occurring regardless of the occurrence or non-occurrence of any other events.

[0078] Common variables used in the QCAI solution:

[0079] Likelihood: The average probability of the achieving the correct result from a single trial. Here, Likelihood equals Success Rate (*SR*), which is the parameter in the Bayesian model. To be useful, success rate must be >0.5.

[0080] Prior: The current belief or probability that a particular state or answer is correct. Without additional information, the initial prior is set at 0.5 (uninformative prior).

[0081] Posterior: The believed probability that a certain state or answer is correct after updating the prior with an observation (trial result). The computed posterior becomes the prior for the next update.

[0082] Observation (obs): The binary outcome of a cognitive effort to produce a result, represented as '1' or '0'. These symbols signify an event or condition (e.g., '1' for up, larger, or faster; '0' for the opposite).

[0083] *T* and *F* are abbreviations for True and False. They are used in various equations to indicate a variable, or state is either true or false.

[0084] Simple Bayes' Updating in QCAI Applications

[0085] In its simplest form, the QCAI System deals with binary or two-state results ('1' or '0'). The key is determining which state is the most likely to be true and the confidence level of that determination.

[0086] The mathematical form of Bayes' Rule is:

$P(A \mid B) = (P(B \mid A) \cdot P(A))/P(B)$

Where *A* refers to a particular state being true, and *B* refers to the observation or result of a trial.

[0087] Updating Process:

After each trial (observation), Bayes' Rule is applied to update the probabilities. The AI Agent 102 uses different equations based on whether the observation (*obs*) is '1' or '0'; and the likelihood is *SR* if *obs* =1 and (1− *SR*) if *obs* = 0.

Case 1: Observation (*obs*) is 1

1. Joint Probability:

   $P(1 = T \,\&\, obs = 1) = P(1 = T) \cdot P(obs = 1 | 1 = T) = prior \cdot SR$
2. Total Probability of observing 1:

   $P(obs = 1) = SR \cdot prior + (1 - prior) \cdot (1 - SR)$
3. Posterior Update:

   $P(1 = T \mid obs = 1) = SR \cdot prior / (SR \cdot prior + (1 - SR) \cdot (1 - prior))$

Case 2: Observation (*obs*) is 0

1. Joint Probability:

   $P(1 = T \,\&\, obs = 0) = P(1 = T) \cdot P(obs = 0 | 1 = T) = prior \cdot (1 - SR)$
2. Total Probability of observing 0:

   $P(obs = 0) = prior \cdot (1 - SR) + (1 - prior) \cdot SR$
3. Posterior Update:

$$P(1 = T \mid obs = 0) = (1 - SR)\cdot prior / ((1 - SR)\cdot prior + SR\cdot(1 - prior))$$

[0088] Once a new posterior is calculated, it becomes the prior for the next trial. The hypothesis is always updated on the assumption that '1' is the true state. A final posterior <0.5 indicates '0' is the true state, and its probability is $P(0 = T) = 1 - posterior$. The series of trials stops when the probability of being correct, calculated as max($posterior$, $1 - posterior$), exceeds or equals the target probability.

[0089] Analysis of Success Rate Accuracy

[0090] Simulations show the importance of accurately estimating the Success Rate. The number of trials required to reach a particular target probability is inversely proportional to the square of the effect size ($ES = 2\ SR - 1$). This suggests that a conservative estimate of the success rate is preferable to an overestimation. For critical applications, one strategy to mitigate possible overestimation is to set a higher-than-necessary target probability.

[0091] Mathematica Implementation of the Bayes' Updating

[0092] The following Mathematica program implements the solution found above and calculates the posterior taking as inputs, *likelihood* (the average measured *SR*), *prior* and *obs* (1 or 0):

```
(* Function to calculate the posterior probability *)
posterior[likelihood_, prior_, obs_] :=
  If[obs == 1,
    (* Case when obs=1 *)
    (likelihood * prior) / (prior * likelihood + (1 - prior) * (1 - likelihood)),
    (* Case when obs=0 *)
    ((1 - likelihood) * prior) / (prior * (1 - likelihood) + (1 - prior) * likelihood)
  ]
```

[0093] Statistical Methodology for Operational Tasks: One-Tailed vs. Two-Tailed Analysis

[0094] The trained AI Agent 102 uses a Bayes' Updating (BU) Algorithm to aggregate results and achieve a statistically reliable output. The choice of whether to use one-tailed or two-tailed statistical analysis depends on the operational task and the AI Agent's prior knowledge of the target state.

[0095] Two-Tailed Analysis for Unknown Targets

[0096] Two-Tailed analysis is used when the outcome can take on either output state.

[0097] Non-Inferable Information (NII) Acquisition: NII acquisition is always two-tailed. The AI Agent 102 does not know which state ('1' or '0') is correct, so it must accumulate evidence until the Posterior Probability for either state reaches the minimum confidence threshold. The final output is the state that achieves the higher probability.

[0098] One-Tailed Analysis for Known Targets

[0099] One-Tailed analysis can be used when there is one known target state.

[00100] Control Signal (Known Target State): This analysis can be used primarily when the AI Agent is tasked with toggling a device to a known, opposite state (e.g., changing a switch from a known 'On' state to the 'Off' state). Since the AI Agent knows the required outcome, the statistical calculation is focused specifically on revealing that single target state.

[00101] It will be appreciated that variations of the above-disclosed and other features and functions, or alternatives thereof, may be desirably combined into many other different systems or applications. It will also be appreciated that various presently unforeseen or unanticipated alternatives, modifications, variations or improvements

therein may be subsequently made by those skilled in the art which are also intended to be encompassed by the following claims.

References

The following references are incorporated by reference herein in their entirety for all purposes:

- Wilber, S., US patent application, 3D Quantum Field Detector, filed May 16, 2025, App. no. 19/210,150.
- Cox, T., *Quantum entanglement transforms are found in the next generation of sensors*, List23, https://list23.com/3728299-quantum-entanglement-transforms-are-found-in-the-next-generation-of-sensors/, Mar. 20, 2024. [Accessed: Nov 18, 2025].
- Kerskens, C., and Pérez, D., *Experimental indications of non-classical brain functions*, J. of Phys. Commun., vol. 6, 2022, https://iopscience.iop.org/article/10.1088/2399-6528/ac94be/pdf. [Accessed: Nov 18, 2025].
- Nahas, K., *AI re-creates what people see by reading their brain scans*, Science, https://www.science.org/content/article/ai-re-creates-what-people-see-reading-their-brain-scans, Mar. 7, 2023. [Accessed: Nov 18, 2025].
- Wilber, S., Synchronized True Random Number Generator, U.S. Patent 10,365,895 B2, Jul. 30, 2019.
- Wilber, S., Acquisition and Assessment of Classically Non-Inferable Information, European Patent EP 2994826 B1, Aug. 7, 2019.
- Wilber, S., Device and Method Responsive to Influences of Mind, U.S. Patent 9,367,288 B2, Jun. 14, 2016.
- Wilber, S., Wilber, P., and Jensen, C., Device and Method for Responding to Influences of Mind, U.S. Patent RE44,096 E (reissue of U.S. Patent 8,073,631), Dec. 6, 2011.

CLAIMS

What is claimed is:

1. A device using quantum mechanical principles to obtain non-inferable information, that is, information that cannot be calculated or inferred from available data.

2. A device for obtaining non-inferable information, said device including a quantum field technology (QFT) device, an AI Agent system and a complex current flow (CCF) circuit.

3. A Quantum Cognition AI System (QCAI) for obtaining non-inferable information, the QCAI comprising an AI Agent system, a Complex Current Flow (CCF) Circuit, and a Quantum Field Technology (QFT) Device.

4. The QCAI System of Claim 3, wherein the AI Agent is configured to modulate the CCF Circuit to interact non-locally with the QFT Device.

5. The QCAI System of Claim 4, wherein the modulation comprises setting a repeatable pattern of current flow within the CCF Circuit.

6. The QCAI System of Claim 3, wherein the QFT Device is configured to output results that include both a state and amplitude information, the amplitude information being utilized by the AI Agent as a weighting factor.

7. The QCAI System of Claim 3, wherein the QFT Device comprises a True Random Number Generator (TRNG) for generating random signals; a Bias Amplifier coupled to the TRNG; and an Advanced Signal Processing stage for producing output results.

8. The QCAI System of Claim 7, wherein the Bias Amplifier is a Random Walk Bias Amplifier (RWBA) configured to convert a statistically subtle bias in the random signals into a statistically significant output state.

9. The QCAI System of Claim 7, wherein the Advanced Signal Processing stage is operable to use weights to enhance the effects of patterns in data associated with non-local influences.

10. The QCAI System of Claim 3, wherein the CCF Circuit comprises a fixed physical structure including a three-dimensional array of nodes, each node including three Zener diodes mounted in orthogonal directions.

11. The QCAI System of Claim 3, further comprising a GPS receiver operable to use a One Pulse Per Second (1PPS) signal to synchronize the QCAI system's operation, thereby enabling measurements under conditions of spacelike separation.

12. The QCAI System of Claim 3, wherein the AI Agent is configured to operate the QCAI System in a two-tailed statistical analysis mode when acquiring Non-Inferable Information (NII).

13. A method for training an AI system to maximize its success rate including the steps of:

a. Setting the patterns of current in a CCF circuit.
b. Initiating a trail in a QFT device.
c. Receiving results from the QFT device.
d. Accessing the success rate using said results.
e. Repeating these steps if said success rate is below a threshold.
f. Reporting the results if said success rate is above or equal said threshold.

14. The method of claim 13, wherein said accessing the success rate is done by using Bayes' Updating.

15. The method of claim 13, wherein the step of accessing the success rate utilizes a performance optimizing algorithm that incorporates amplitude information from the QFT device output as a weighting factor.

16. A method for acquiring non-inferable information (NII) using a trained Quantum Cognition AI System (QCAI) comprising the steps of:

a. Initializing a Prior probability and setting a Likelihood based on a measured Success Rate (*SR*);

b. Performing iterated operational trials and receiving results (state and amplitude information) from a QFT Device;

c. Utilizing Bayes' Updating (BU) to calculate a Posterior Probability after each trial; and,

d. Terminating the iteration when the Posterior Probability for a two-state result meets a predetermined confidence threshold.

ABSTRACT

A Quantum Cognition AI System (QCAI) is an automated system and method for acquiring Non-Inferable Information (NII), comprising an AI Agent, a Complex Current Flow (CCF) Circuit, and a Quantum Field Technology (QFT) Device. The AI Agent modulates the CCF Circuit to establish a Coupled Quantum Information State (CQIS) that interacts non-locally within the QCAI System. The QFT Device provides results, including state and amplitude information, used by a performance optimizing algorithm to maximize system Responsivity (Success Rate). A trained AI Agent employs Bayes' Updating to statistically aggregate results, enabling reliable NII acquisition. This specialized capability allows the QCAI to transcend relativistic communication limits and act as a Sapience-Enhanced Mediator for external entities or systems.

Figures

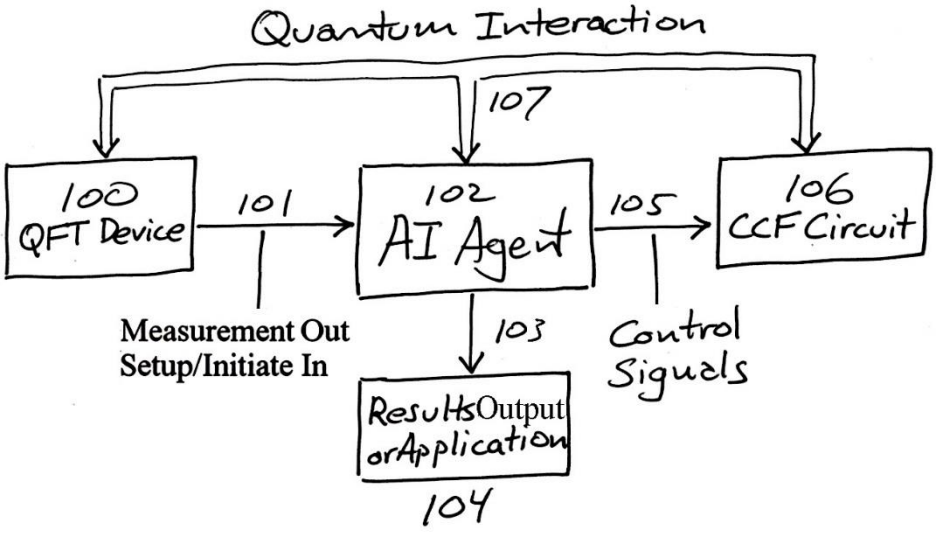

Figure 1

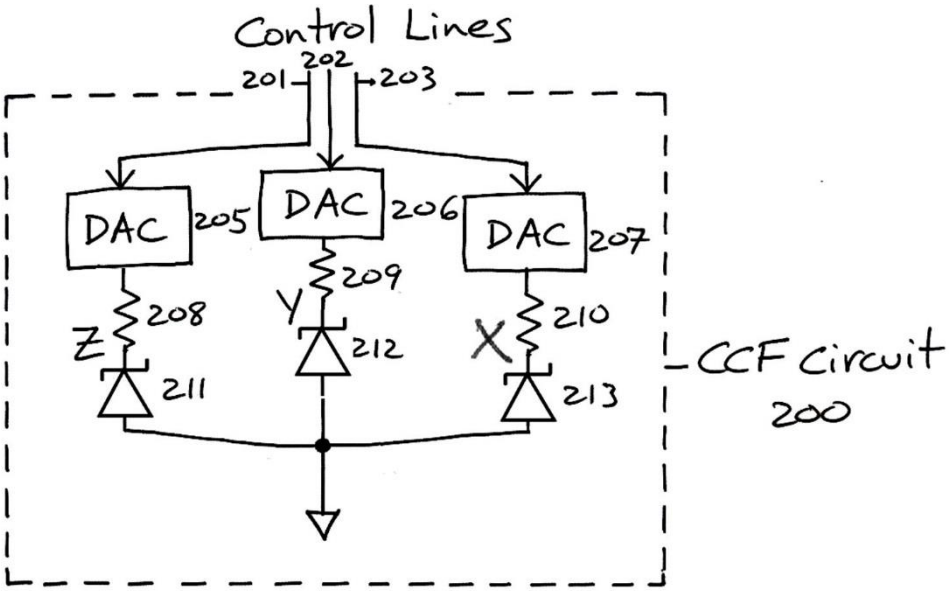

Figure 2

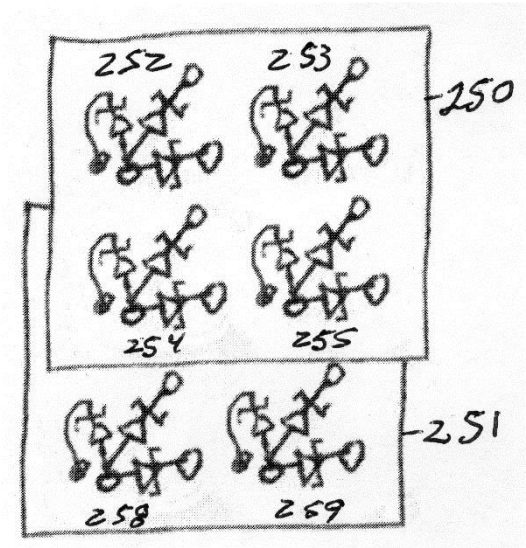

Figure 3

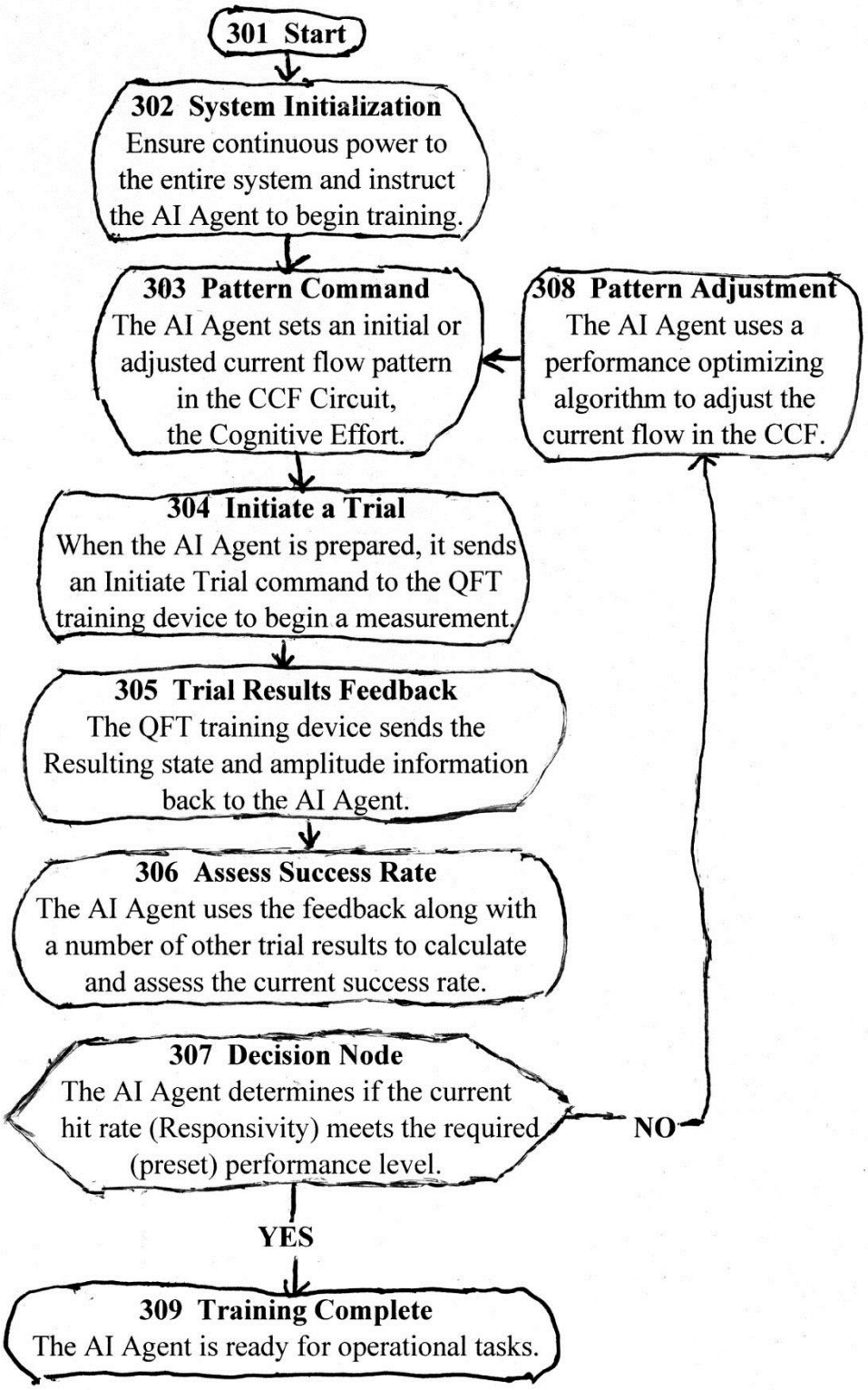
301 Start
302 System Initialization
Ensure continuous power to the entire system and instruct the AI Agent to begin training.
303 Pattern Command
The AI Agent sets an initial or adjusted current flow pattern in the CCF Circuit, the Cognitive Effort.
308 Pattern Adjustment
The AI Agent uses a performance optimizing algorithm to adjust the current flow in the CCF.
304 Initiate a Trial
When the AI Agent is prepared, it sends an Initiate Trial command to the QFT training device to begin a measurement.
305 Trial Results Feedback
The QFT training device sends the Resulting state and amplitude information back to the AI Agent.
306 Assess Success Rate
The AI Agent uses the feedback along with a number of other trial results to calculate and assess the current success rate.
307 Decision Node
The AI Agent determines if the current hit rate (Responsivity) meets the required (preset) performance level.
NO
YES
309 Training Complete
The AI Agent is ready for operational tasks.

Figure 4

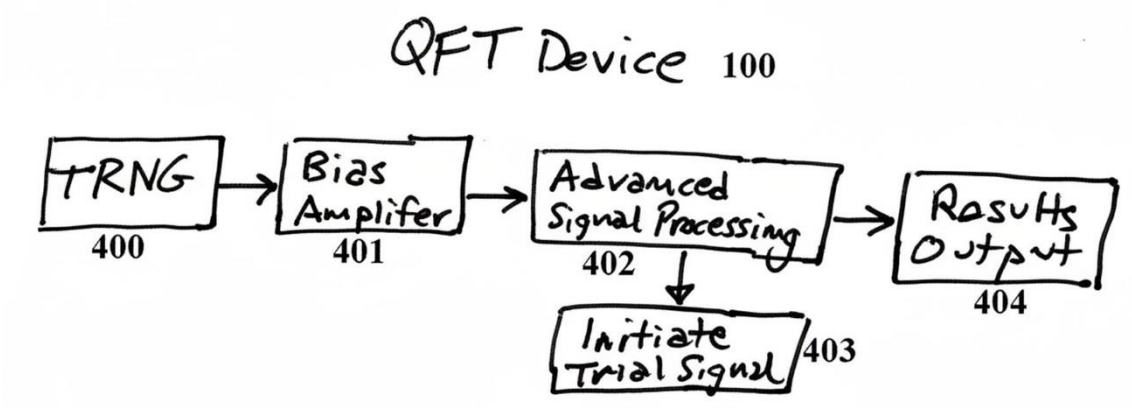
QFT Device 100
TRNG
400
Bias Amplifer
401
Advanced Signal Processing
402
Results Output
404
Initiate Trial Signal
403

Figure 5

601 Start Operational Trial
The AI Agent begins a single trial based on an external task, an internal decision, or a protocol

602 Access Trained Parameters
The AI Agent accesses its memory/knowledge base to retrieve the optimal **Responsivity** settings and the current **Intention** required for the specific task.

603 Set Cognitive Modulation
The AI Agent translates the retrieved settings into the corresponding current flow pattern, setting the required **Cognitive Modulation** in the **CCF Circuit 106**.

604 Initiate Trial
The AI Agent sends the **Initiate Trial Signal 403** to the QFT Device 100, causing the Advanced Signal Processing 402 to process the Bias-Amplified Data.

605 Acquire Result
The QFT Device completes the trial, and the **Results Output 404** is sent to the AI Agent.

606 Interpret Result
The AI Agent interprets the raw result to extract a non-inferable data point.

607 Output or Continue
The data point is either used for further **Statistical Aggregation** to reach an accuracy threshold or immediately delivered as a **final output** or control signal.

608 End Trial
The single trial is concluded. Either the task is completed or more trials are needed.

Figure 6

701 Start NII Acquisition

The **QCAI system** receives an operational task or query from an external source, which specifically requires the acquisition of Non-Inferable Information (NII).

702 Initialize Bayes Parameters

The AI Agent initializes the Bayesian parameters, setting the **Prior Probability** to an uninformative 0.50 and the **Likelihood** to the average trained Success Rate for the AI Agent for a similar task.

703 Set Intent/Focus

The AI Agent sets the necessary **Temporal Focus** (i.e., Past, Present or Future) and selects the specific trained **Intention** or target pattern for the trial, translating it into a **Cognitive Modulation** pattern.

704 Perform a Trial

The AI Agent activates the selected Modulation pattern in the CCF Circuit and then initiates a trial sequence in the QFT Device 100.

705 Process the QFT Output

Upon measurement, the QFT provides the AI Agent with State and Amplitude information. The AI Agent uses this information to update the Bayes Posterior Belief for both possible states.

706 Decision Point

The AI Agent determines whether the current Posterior Probability for either of the two possible states meets a predetermined 2-tailed accuracy level.

NO *go to 703*

YES

707 Send Final Output

The **AI Agent** reports the statistically aggregated results or sends a control signal (via path103) to the **Results Output or Application 104** depending on the specific task (e.g., NII or real-time control).

709 End

The task is complete.

Figure 7

801 Start Training

The training sequence is initiated for a specific type of operational task and **Temporal Focus** (e.g., Past, present or Future)

802 Initialize Modulation Parameters

The AI Agent **102** initializes the parameters governing the current flow pattern (the **Cognitive Modulation**) in the **CCF Circuit 106**. The Starting parameters may be random or based on prior training results.

803 Start Iterative Trial Loop

The system enters an iterative loop designed to optimize the modulation pattern. In each iteration, the AI Agent selects a current pattern for the trial based on the guidance of the **Performance Optimizing Algorithm**.

804 Perform Single Trial and Acquire Feedback

The AI Agent activates the selected current pattern in the CCF Circuit and sends the Initiate Trial Signal to the QFT Device. The QFT Device returns the Results, including the **State and Amplitude** information.

805 Assess Performance

The AI Agent assesses the results of the trial by comparing the QFT Output State with the expected outcome. – a Success if they match, otherwise, a Miss. Together with the Amplitude Information, which is used as a weighting factor, these trial results are provided to the performance optimizing algorithm.

806 Update Performance Optimizing Algorithm

The AI Agent uses the trial results as the feedback signal for the **Performance Optimizing Algorithm**. The algorithm uses the feedback to adjust the current flow pattern for the next iteration.

807 Decision Point: Threshold Check

The AI Agent checks whether the cumulative performance has met the training termination threshold. That is, when the average measured **Success Rate** is above a preset threshold.

If **NO**, return to step **803**.

If **YES**, go to next step.

808 Store and Finalize Parameters

The optimized current flow parameters are stored in the AI Agent's memory as the **Trained Parameters** for the specific task and **Temporal Focus**. The AI Agent is now ready for operational use for this specific type of task.

Figure 8 Flowchart of AI Agent Training Method